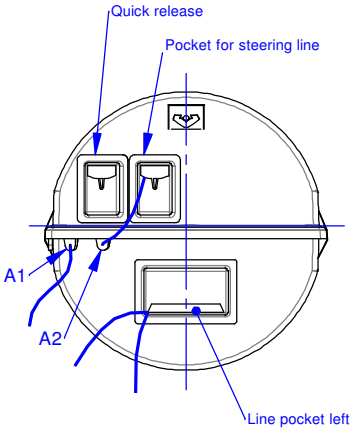


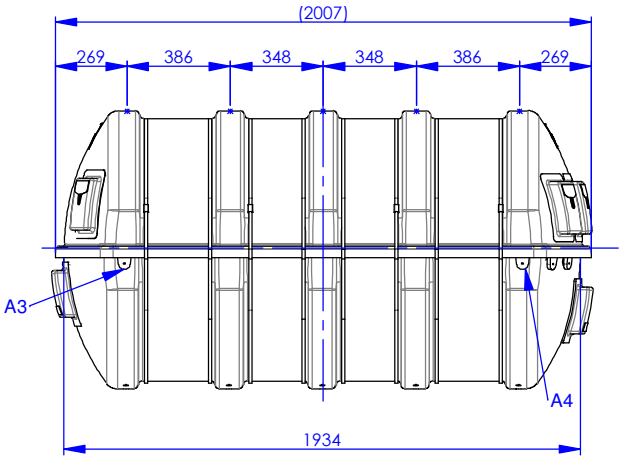


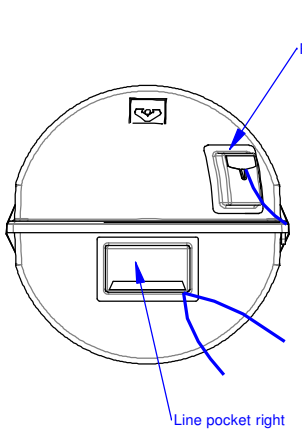


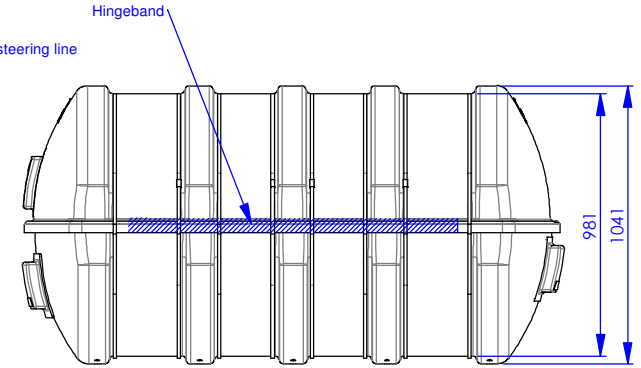


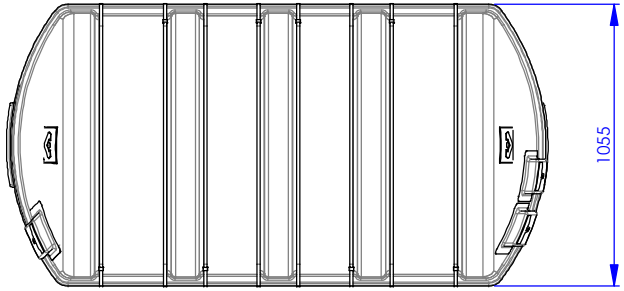


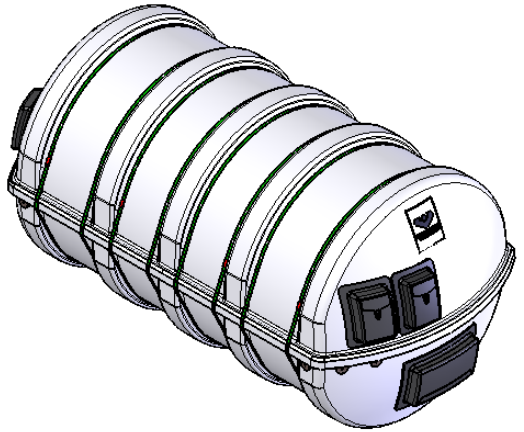

NOTES

All cut out dimensions see working instructions fiberglass (No. 2198E)

Please note that the meassurement given in this drawing are for your information only

| WI No. | A1 | A2 | A3 | A4 |
|---|---|---|---|---|
| 2198E | 430 ±5 | 310 ±5 | 745 ±5 | 745 ±5 |

If the product is requested to be manufactured differently, this MUST be approved by VIKING LIFE-SAVING EQUIPMENT A/S and a specification of change must be filled in if the alteration is approved. Unless otherwise specified the product must always be clearly labelled with Viking part no., manufacturer ID and manufacturing year.

| MATERIAL NO: | Old DWG No: | STATUS: | UNITS: | WEIGHT : | CHECK DATE/INIT: |
|---|---|---|---|---|---|
| 1006601 | 300-1483 | FR | mm/kg | 122,767 | 20170331/DW |

| BASIC MATERIAL: | SURFACE TREATMENT: | SHEETSIZE : | SCALE : | SHEET NO : | DRAWN DATE/INIT: |
|---|---|---|---|---|---|
| | - | A3 | 1:20 | 1/1 | 20170331/DW |

VIKING LIFE-SAVING EQUIPMENT A/S
Sædding Ringvej 13, DK-6710 Esbjerg V
Tel.: +45 7611 8100
Fax.: +45 7611 8101
E-mail: viking@viking-life.dk
Web: www.VIKING-life.com

PROJEKTION TYPE: FIRST ANGLE PROJECTION

GENEREL TOLERANCE : -

DESCRIPTION :

# Cont.Varim 100DKS 016-8801

'B-pack' Direct boarding - Replaces 016-0168

W/pocket 1006601 **150 DKR**

Copyright of VIKING LIFE-SAVING EQUIPMENT DENMARK whose property this document remains. No part thereof may be disclosed, copied, duplicated or in any other way made use of except with the approval of VIKING LIFE-SAVING EQUIPMENT DENMARK.

| CAD NO. : | Drawing NO. : | REV NO. : |
|---|---|---|
| 14000074 | 16000155 | 00 |