REACTION FORCES IN DECK							
Node	Indication	Fx (kN)	Fy (kN)	Fz (kN)	Mx (kNm)	My (kNm)	Mz (kNm)
F1	Max/Min	341/-30	334/-114	±15	6/-120	±69	9/-107
F2	Max/Min	341/-30	334/-114	±15	6/-120	±69	9/-107
F3	Max/Min	0/-372	196/-251	0	0	0	152/0
F4	Max/Min	0/-372	196/-251	0	0	0	152/0
F5	Max/Min	0	18	75	20	0	0
F6	Max/Min	-37.5	0	-37.5	-10	0	10
F7	Max/Min	0	0	-75	-20	0	0
F8	Max/Min	-37.5	0	37.5	10	0	-10

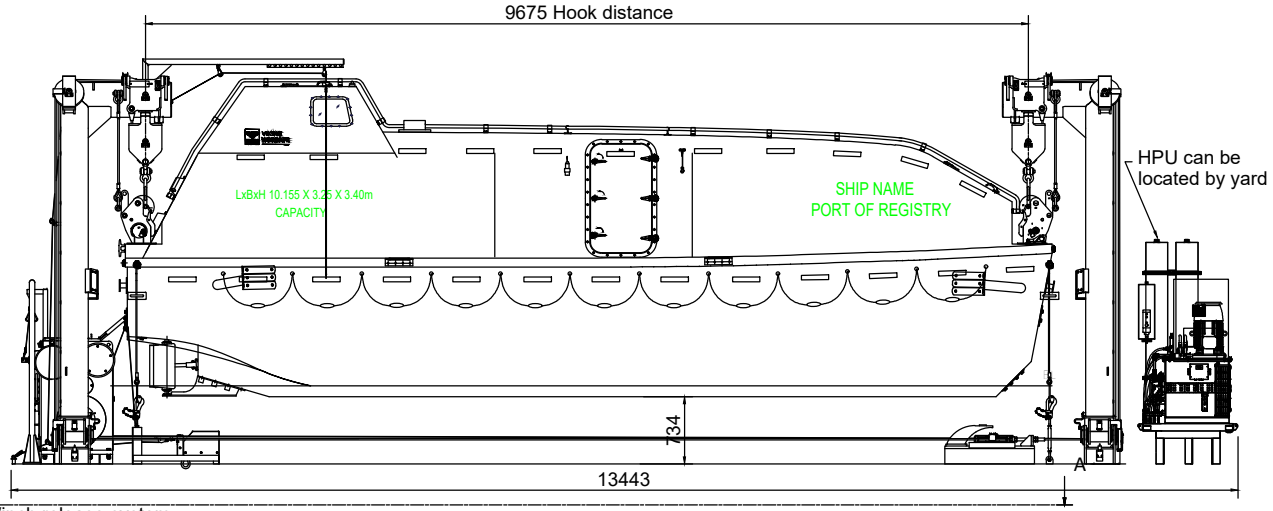

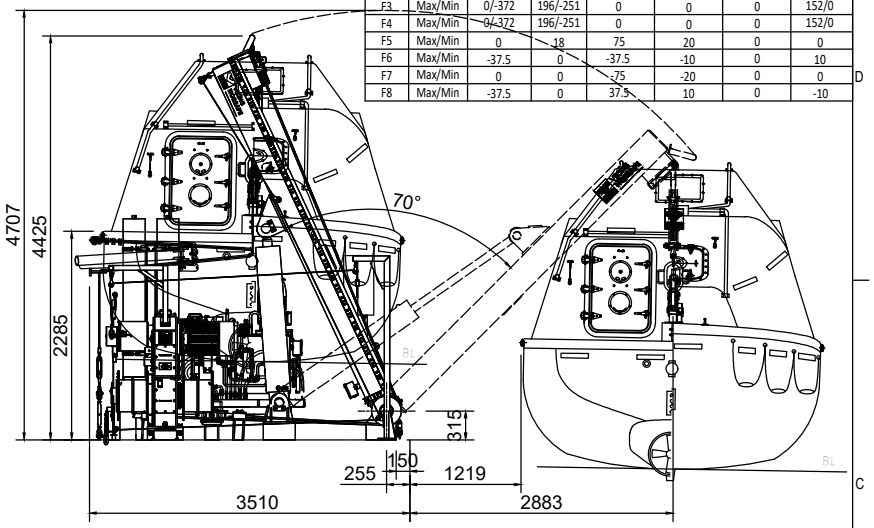

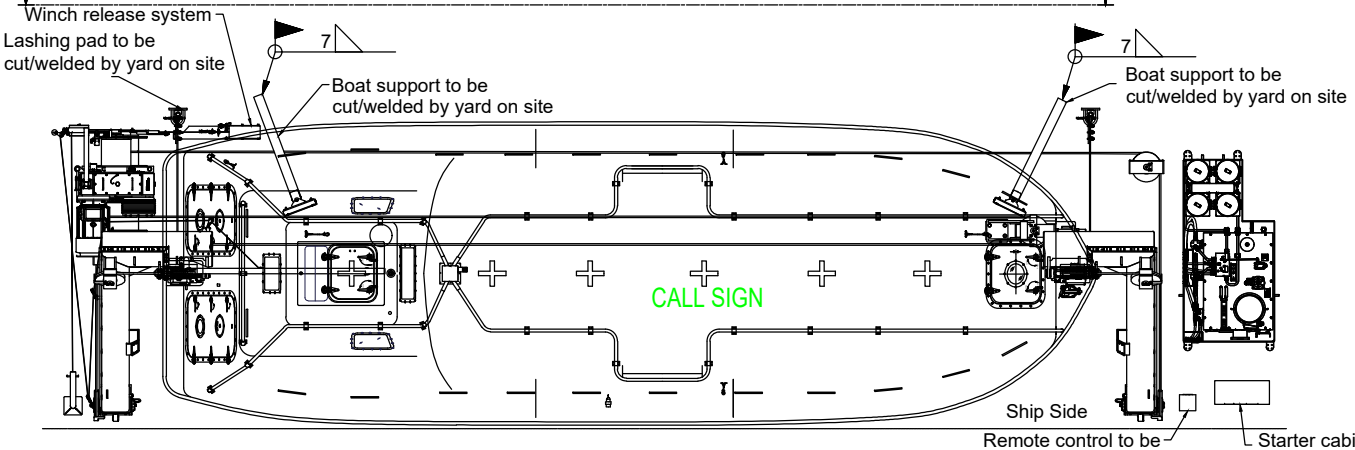

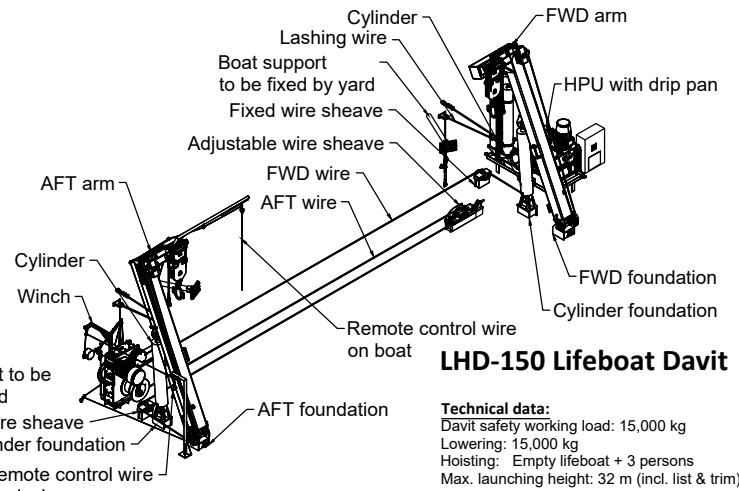

LHD-150 Lifeboat Davit

Technical data:
Davit safety working load: 15,000 kg
Lowering: 15,000 kg
Hoisting: Empty lifeboat + 3 persons
Max. launching height: 32 m (incl. list & trim)

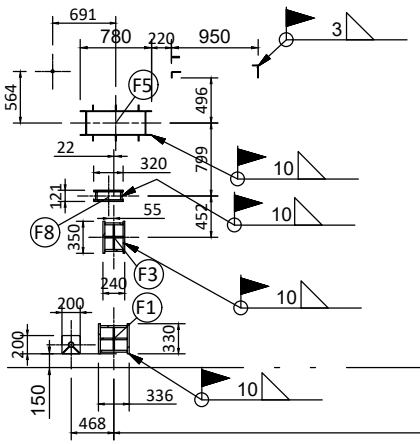

A-A (1:60)

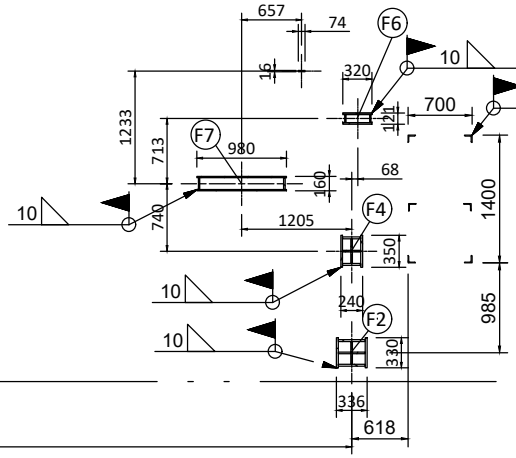

Ship Side

Notes:

1. All embarkation and service platforms etc.: Yard supply;
2. Field welds to be performed by yard are shown by ▶;
3. All field welds to be performed according to approved WPS (Yard responsibility). All field welding is subject to Class approval prior to start welding;
4. Reaction forces as joint loads each side, marked with nodes on deck interface.
   For orientation of forces see legend with marked XYZ vectors.
   All forces are point loads, nominal forces without any factors.
5. Starter cabinet and remote control to be located by yard.
6. Boat supports and lashing brackets to be located by yard.
7. Starboard davit shown, Portside to be mirrored.

REV	DESCRIPTION	BY	CHECK	APPRO	DATE
2	Updated the view	SHWA	ALJI	WAGU	07.08.2020
1	Ressued for approval	SHWA	ALJI	WAGU	01.07.2019

REVISION HISTORY

VIKING NORSAFE
VIKING Norsafe Life-Saving Equipment Norway AS
P.O Box 115
4852 Færvik
NORWAY
Tel: +47 37 05 85 00
Fax: +47 37 05 85 01
24/7 Service: +47 37 05 63 33
Email: Viking-Norsafe@viking-life.com

Drawn by	Check by	Appr. by	Initial release date
ALJI	WAGU	GNI	20.08.2016

Project number	Project name	Client number

Title
LHD-150 Lifeboat Davit
with JYN-100

Material Number
Weight 0,0 kg
Projection method

Drawing type	Tolerances	Scale	Sheet Size
GA	ISO 2768-mK, ISO 13920-BF	1:60	A3

Drawing Number	Revision	Sheet No.
G-501601	2	1/1