REACTION FORCES IN DECK							
Node	Indication	Fx (kN)	Fy (kN)	Fz (kN)	Mx (kNm)	My (kNm)	Mz (kNm)
F1	Max/Min	+23.4	+68.5	+12	-89	+53	+247
F2	Max/Min	+23.4	+68.5	+12	-89	+53	+247
F3	Max/Min	0	+20	-55	+17	0	0
F4	Max/Min	-28	0	+28	-8	0	+8
F5	Max/Min	0	0	+55	-17	0	0
F6	Max/Min	-28	0	-28	-8	0	-8

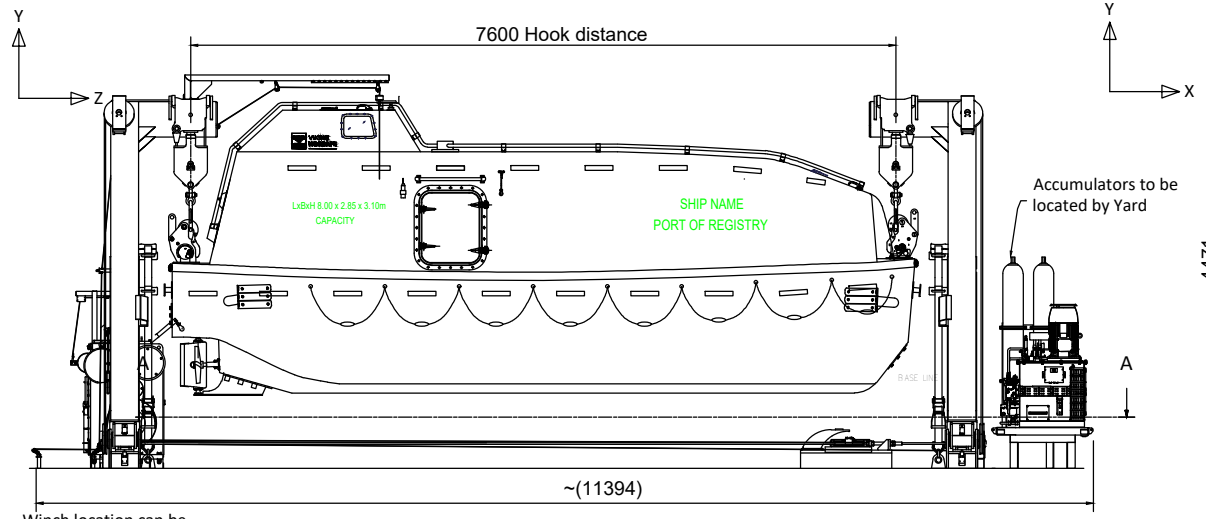

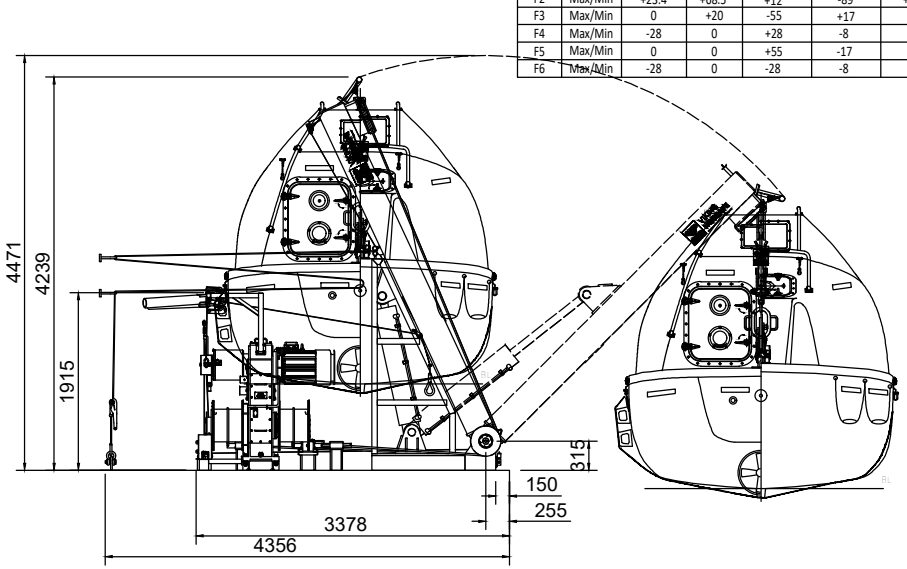

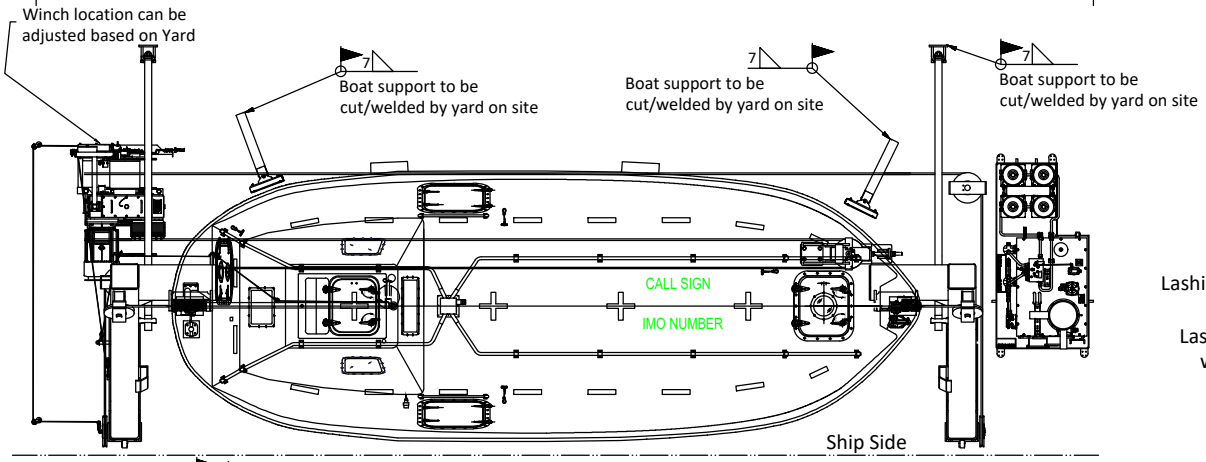

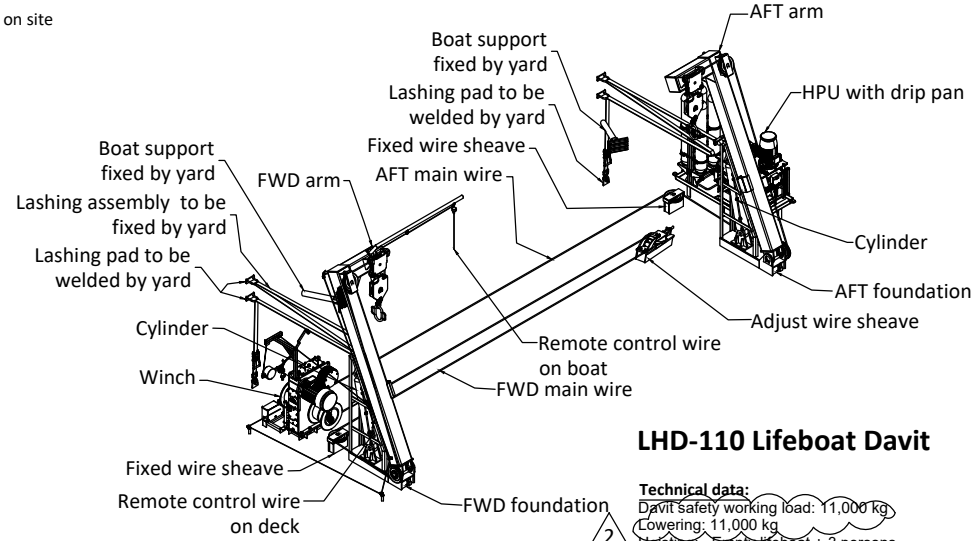

LHD-110 Lifeboat Davit

Technical data:
Davit safety working load: 11,000 kg
Lowering: 11,000 kg
Hoisting: Empty lifeboat + 3 persons
Max. launching height: 52 m (incl. list & trim)

2

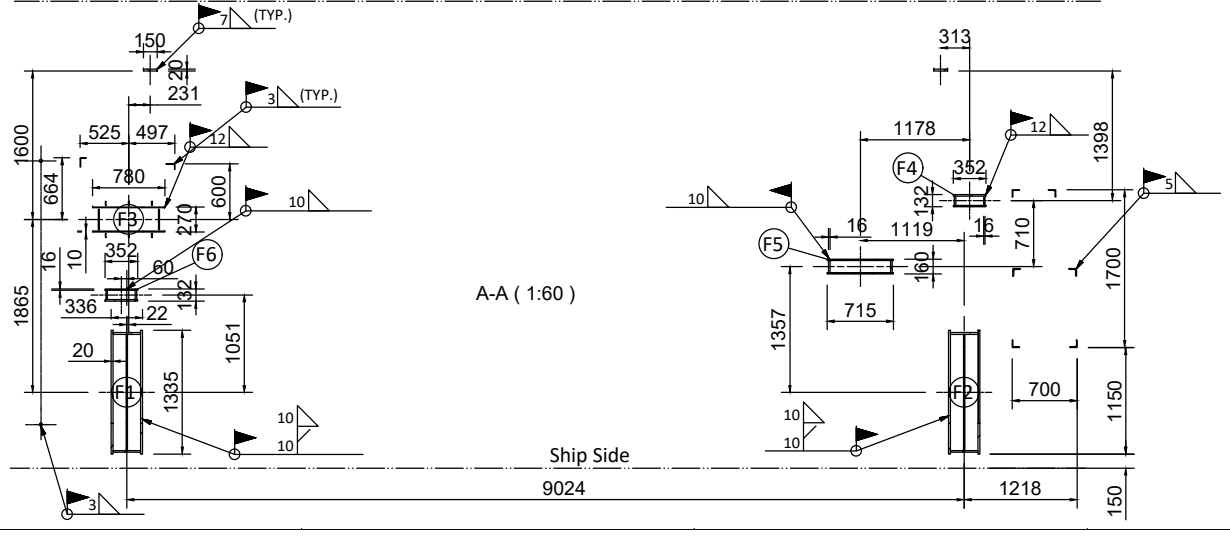

A-A (1:60)

Notes:

1. All embarkation and service platforms etc.: Yard supply;
2. Field welds to be performed by yard are shown by ⚑;
3. All field welds to be performed according to approved WPS (Yard responsibility). All field welding is subject to Class approval prior to start welding;
4. Reaction forces as joint loads each side, marked with nodes on deck interface.
   For orientation of forces see legend with marked XYZ vectors.
   All forces are point loads, nominal forces without any factors.
5. Starter cabinet and remote control to be located by yard.
6. Boat supports and lashing brackets to be located by yard.
7. Starboard davit shown, Portside to be mirrored.

REV	DESCRIPTION	BY	CHECK	APPRO	DATE
2	Update lowering weight	ALJI	MISO	WAGU	15.01.2020
1	Ressued for approval	SHWA	ALJI	WAGU	01.07.2019
0	Issued for construction	ALJI	WAGU	GNI	18.01.2017
A	Issued for review	ALJI	WAGU	GNI	20.10.2016

REVISION HISTORY

VIKING NORSAFE
VIKING Norsafe Life-Saving Equipment Norway AS
P.O Box 115
4852 Færvik
NORWAY
Tel: +47 37 05 85 00
Fax: +47 37 05 85 01
24/7 Service: +47 37 05 63 33
Email: viking@viking-life.com

This drawing is the sole property of VIKING Norsafe Life-Saving Equipment Norway AS. It must not be submitted to other parties nor used in any manner detrimental to our interests. It shall not be copied, reproduced, used for manufacturing or sale without the written consent of VIKING Norsafe Life-Saving Equipment Norway AS. All rights are reserved.

DWG SIZE: A3	SCALE: 1:60	COPY OF:	PART NO.	WEIGHT:	SHEET: 1 /1
CLIENT NO:			PROJECTION METHOD	
TOLERANCES: ISO 2768-mk, ISO 13920-BF				
DWG No.: G-501699			REVISION: 2	
PROJECT:				

LHD-110 LIFEBOAT DAVIT
WITH JYN-80

GENERAL ARRANGEMENT