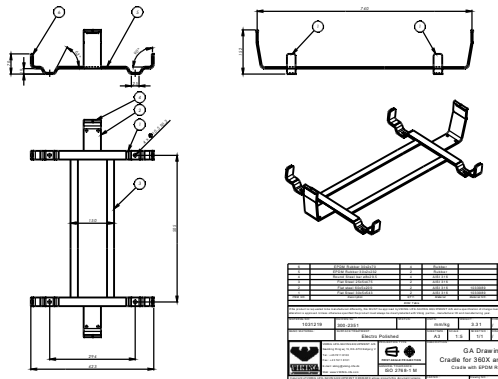

5	Profile Rubber 400NR/70	2	Rubber		14000000
4	EPDM Rubber 500x100	2	Rubber		14000001
3	Cradle Rubber 400x100	2	Rubber		14000002
2	Frame Bolt M8x40	4	A2-70	1000000	14000003
1	Frame Bolt M8x25	4	A2-70	1000000	14000004
6	Flat washer M8x25x2	8	A2-70	1000000	14000005
7	Flat washer M8x25x2	8	A2-70	1000000	14000006
Item No.	Part Name	Qty.	Material	Weight	Part No.

Note: 1. Dimensions marked in parentheses are for reference only.
2. Unless otherwise specified, all dimensions are in mm.
3. Unless otherwise specified, all tolerances are ±0.1mm.
4. Unless otherwise specified, all sharp edges to be chamfered or rounded.
5. Unless otherwise specified, all welds to be continuous and free from defects.

1501219	00-2301		Andrew	8.21	
Surface Finishing	Electro Polished		A3	1:5	1/1

Shenzhen Wanshitong Technology Co., Ltd.
Address: 5/F, Jiaxi Industrial Park, Jiaxin Road, Longhua Town, Shenzhen, China
Tel: +(0755) 8280 4000
Fax: +(0755) 8280 4000
E-mail: sales@szwsty.com.cn
Web: www.CNWSTech.com

WELDING TECHNOLOGY

Shenzhen Wanshitong Technology
ISO 2768-1 M

GA Drawing
Cradle for 360X and 380X
Cradle with EPDM Rubber

This drawing is the property of Shenzhen Wanshitong Technology Co., Ltd. It is loaned for confidential use and must not be reproduced or copied without our written consent.

Drawing No. 14000752 | Sheet 3012364 | Rev. 00