First angle projection

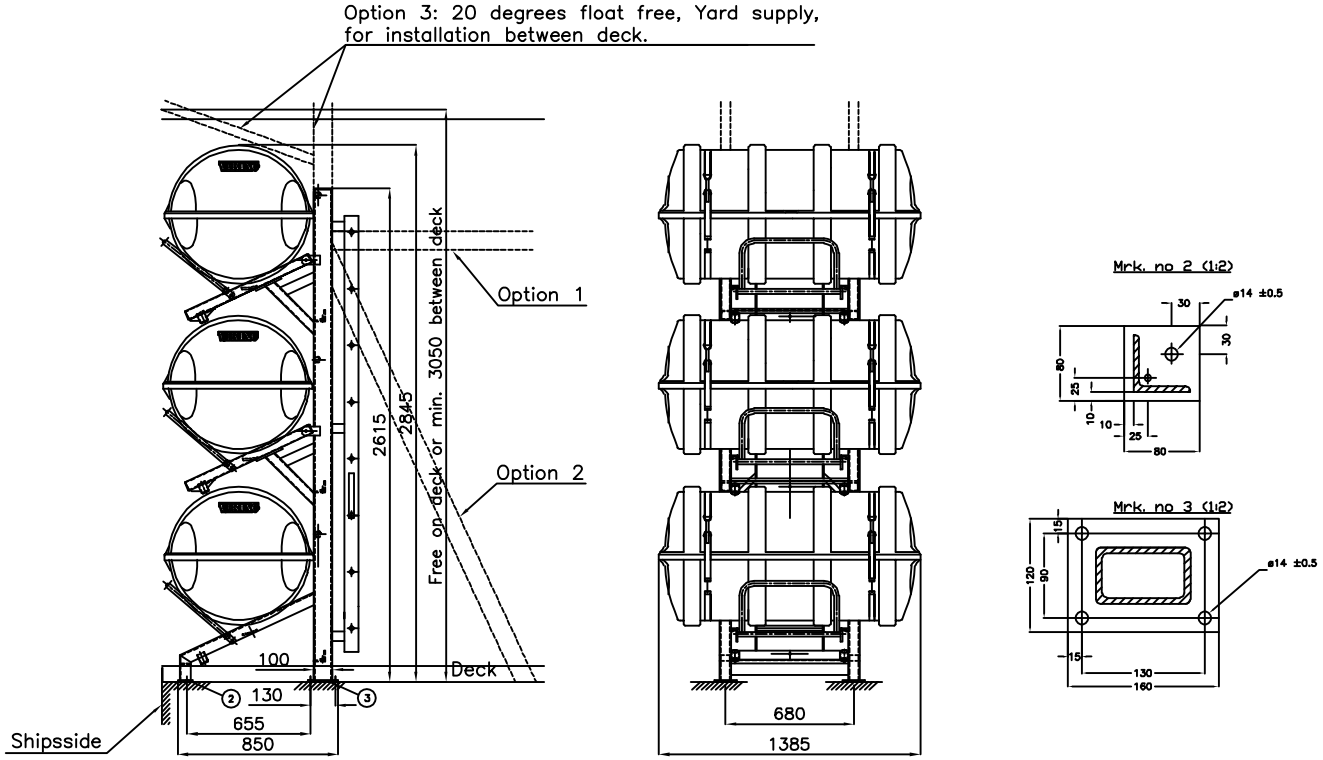

Option 1 or 2 as yard supply if free on deck.

016–0114	DKF 12 A	1015780
016–5200	DK 25 A	1023894
016–6000	DK 25 B	1023894
016–8601	DKS 25 A+B	1025560
016–8500	DKFS 25	1015780
016–8100	DKF 25	1015780
016–8000	DKF 16–20	1015780
016–6000	DK 20 A	1023894
016–5200	DKR 50	1023894
016–5100	DK 16	1023894
Container Part no.:	*Description:*	*Lashing:*

In case VIKING does not manufacture the cradle, VIKING will not be held responsable for construction, dimensioning and choice of material for the rack.

Measurements without tolerances ±25

Weight: app. 165 kg
Part no.: 1026509

Issue/ ref. no	Date:	Check:

Mrk.	Object	Num.	Draw no.	Materiel	Part no.
2	Plate 160x120x8	3		R. st. 37–2 DIN 17100	
2	Plate 80x80x8	2		R. st. 37–2 DIN 17100	
1	Rack	1	834–167.x–1		

Copyright of VIKING LIFE-SAVING EQUIPMENT, DENMARK, whose property this document remains. No part thereof may be disclosed, copied, duplicated or in any other way made use of. Except with the approval of VIKING LIFE-SAVING EQUIPMENT, DENMARK.

VIKING LIFE–SAVING EQUIPMENT
P.O. Box 3060
6710 Esbjerg V
Denmark

General arrangement
Column Rack for 3 pcs. Liferaft containers
–

Scale:	Dim. in:	Drawn.:
1:20	MM	11.06.07 LRM
		Check.: 11.06.07 MS

Drawing no.: 834-165.x-2

CAD Nr.: 8341652