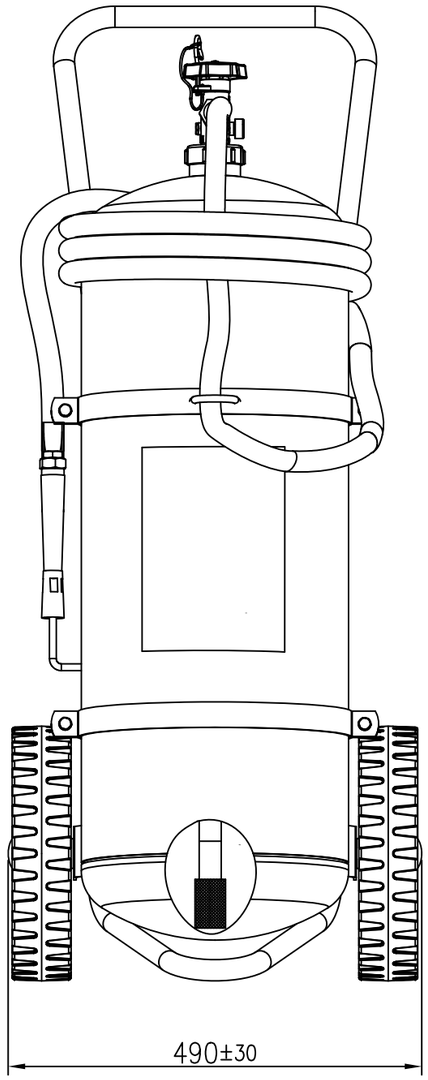

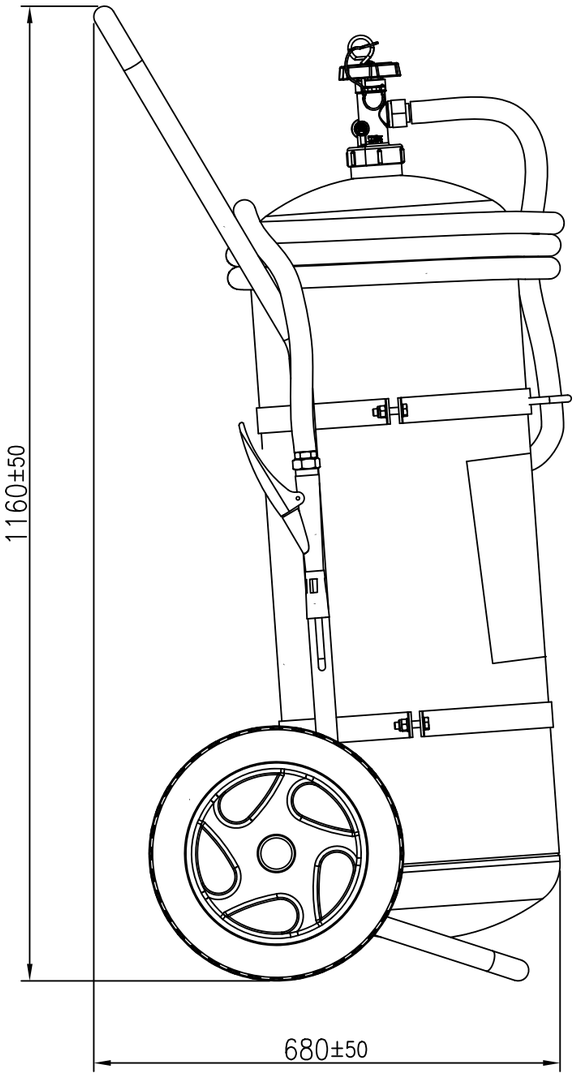

FS50-DM FF Master Family Code

A	ISSUE EMISSIONE EMISSION	AL 24/02/2022	JC 24/02/2022	YA 24/02/2022	

Format Formato Size A2

Ind. Ind. Appr.

Revision Revisione Revision

Cmpd. par Compd. by Compd. by

Contr. par Contr. by Checked by

Approuv. par Approv. by Appr. by

ANAFGROUP

Tolérance Tolerance Tolerance ISO-2768-v	Masse Massa Mass - g			FS50-DM FF
Traitement Trattamento Treatment =	Echelle Scala Scale 1:5			Fire Extinguisher 50L stored pressure and detachable frame
Matériel Materiale Material =				77.132T.P000.00
				Rev. A